California ISO
Shaping a Renewed Future

DSO and TSO Roles and Responsibilities in the Decentralized Energy Future

Lorenzo Kristov, Ph.D.
Principal, Market & Infrastructure Policy

Gridwise Architecture Council
September 11, 2014

DISCLAIMER

Ideas in this presentation are offered for discussion purposes only, and do not reflect the views or policies of the California ISO.

The proliferation of distribution-connected resources (DER) requires re-thinking the T-D interface.

OUTLINE

- Traditional distribution system operation and planning are not adequate for the high-DER future.
- The T-D interface provides a logical focus for re-thinking electric system operation and architecture.
- T-D interface design options & associated DSO functional roles can be represented along a continuum.
- The “minimal DSO” appears to be where most ISO/RTO trajectories are heading.
- System architecture perspectives & methods offer a valuable tool for evaluating design alternatives.
- Structural components, functional roles, business models & regulations should support whole system performance.

Clean energy policies, technological advances & customer demands are transforming the industry.

- Proliferation of distributed energy resources (DER) requires re-thinking traditional electricity paradigms
  - Decentralization trend via growth of diverse, small-scale, local, renewable resources
  - Technology innovation offers greater customer choice & functionality at ever decreasing costs
  - Multi-directional energy flows & varied resource types & behavior patterns on distribution systems
  - Demand for local resilience to major disturbances (micro-grids with islanding capability)
  - Local & behind-the meter energy production reduces net energy demand & energy-based revenues
  - Dispatchable/flexible DER types may provide reliability services to distribution operators

The T-D interface is a useful focus for thinking about how to design tomorrow's energy network.

- Transmission: meshed network, high-voltage energy flows, large central-station power plants
- Distribution: radial circuits, lower voltages, local production for delivery to end-use customer premises
- T-D interface: a substation; a pricing node (P-node) in LMP markets; traditional boundary of wholesale-retail markets, operations & regulatory jurisdictions
- As DER proliferate, traditional T-D boundary is eroding:
  - DER participate in wholesale markets
  - DER provide resource adequacy capacity

<u>Question</u>: Should the T-D boundary fade into irrelevance?

Or are there good design reasons to reinforce the T-D interface as an operational, market & regulatory boundary?

The "Integrated Decentralized" Electric Industry Structure

Future "integrated decentralized" electricity system with high-DER

Multi-directional energy flows; Multi-level optimizations

- Each "local distribution area" (D) & its T-D interface with must operate reliably
  - Even though one company may operate hundreds of D areas
- Multi-directional flows within each D area replace traditional one-way energy flows
- Some DER will be "self-optimizing" & able to island (micro-grids, smart buildings)
- Definition of roles & responsibilities of TSO & DSO will drive relevance of T-D interface as an operational, market & regulatory boundary, requiring specific functions of the "distribution system operator" (DSO).

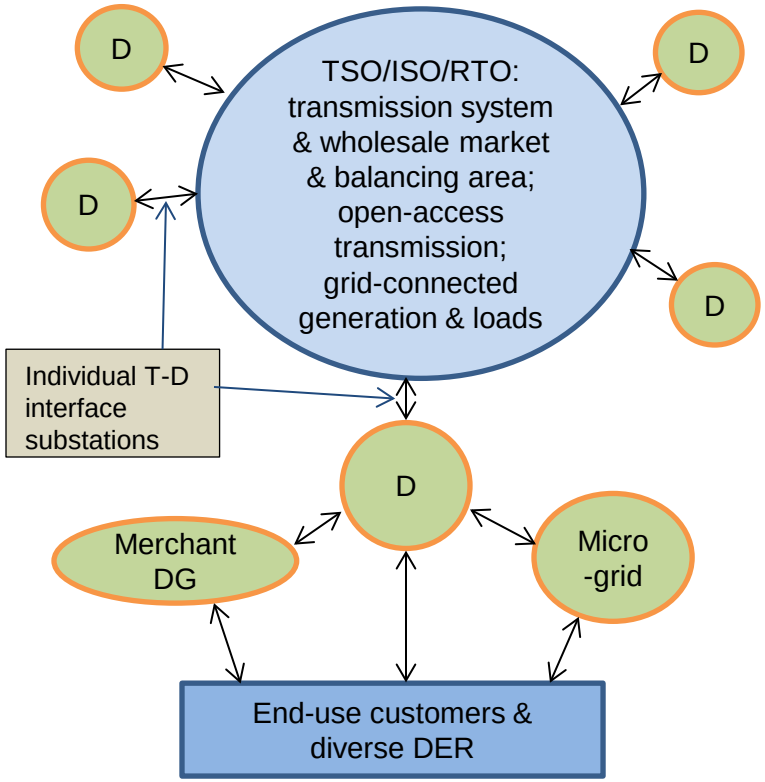

A spectrum of possible designs can be envisioned in terms of the complementary roles of DSO and TSO.

Least ← Relevance of T-D boundary → Most

Model A –
TSO optimizes the whole integrated system – all the way down into the distribution system

Model B –
TSO optimizes the whole integrated system – but only down to P-node level

Model C –
TSO optimizes only the transmission system – sees multiple aggregate or "virtual" resources at each P-node

Model D –
TSO optimizes only the transmission system – sees a single aggregate or "virtual" resource at each P-node

Minimal DSO

Total DSO

The Minimal DSO seems to be where the current ISO/RTO trajectory is heading.

- Trajectory of mass gravitation of DER to the wholesale market
  - "Because that's where the money is!" – Willie Sutton
- Model A – (less likely) – the TSO market optimization models distribution circuits, models DER at actual locations
- Model B – (more likely) – the TSO market optimization stops at the P-node, models DER at the P-node
  - TSO dispatches DER *without knowing impacts on distribution system & feasibility of multiple dispatches at a given P-node*
- Under A or B the TSO market optimizes 10,000s of individual DER above a low size threshold (100 kW)
  - Minimal DSO performs minimal coordination of DER to maintain reliability & support local DER transactions & responses to TSO dispatches

"If we don't change direction soon
we'll end up where we're going." – folk proverb

System architecture perspectives & tools can help assess the design alternatives.

A “system architecture” is a model of a complex system that enables us to think about the overall design of the system, its attributes & how the parts interact (Jeffrey Taft, PNNL). A system architecture helps us address questions like:

- How does the combined T+D grid behave as a *whole system*?
- What is the control structure for the whole T+D system? What’s the ideal control structure to achieve public policy objectives?
- How do grid controls interact with, facilitate or limit wholesale & retail market transactions? Facilitate or inhibit innovation?
- How do autonomous DER behaviors interact with TSO & DSO functions? How can micro-grids, smart buildings & flexible DER provide services to the DSO?
- If the future involves proliferation of DER, how should distribution company roles & responsibilities change? How would different models of change affect such issues as grid control, markets, innovation, system security, regulatory oversight & achievement of policy goals?

Simplified architecture diagrams show key differences between models A-B-C versus model D (Taft).

Models A-B-C

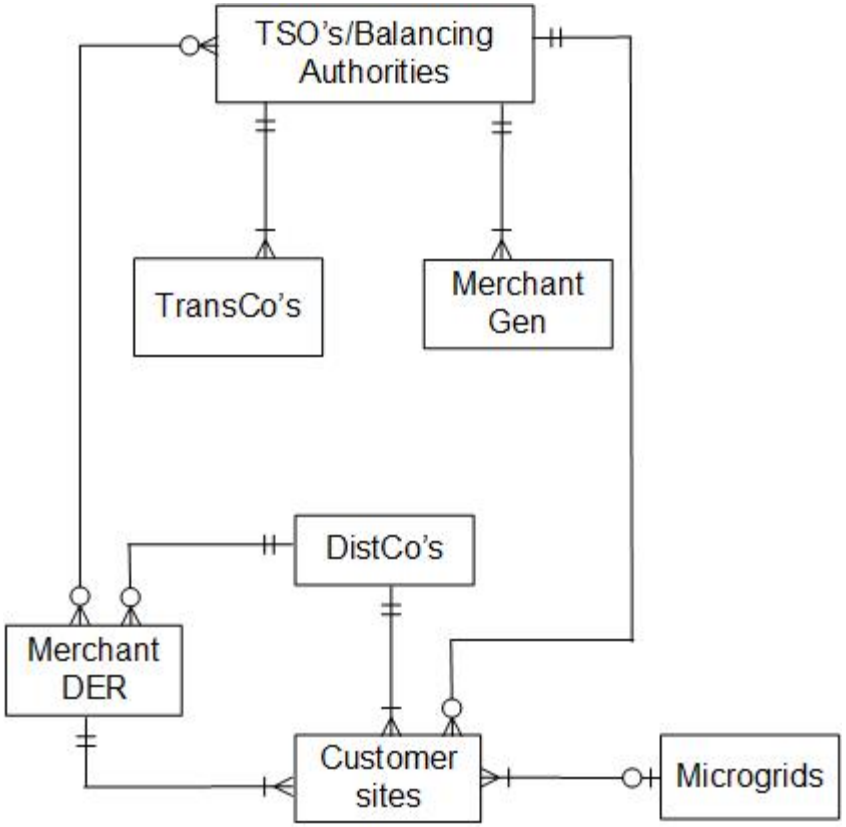

Model D

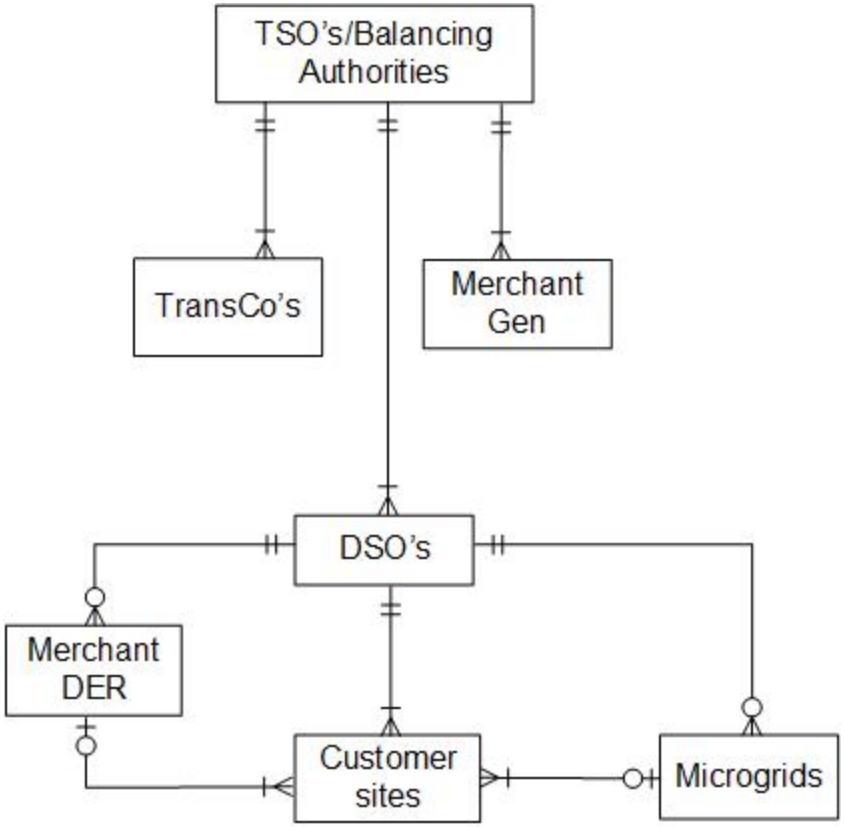

The system architecture perspective offers observations on the models we've been discussing (Taft).

Models A-B-C	Model D

• Structurally problematic
  • No formal basis
• Tier bypassing leads to destabilization
• Ad hoc form limits understanding of properties
  • Emergent (i.e., unintended, surprising) behavior
• Scalability is challenged
• Unnecessary connectivity raises extra cyber-security issues
	• Structurally sound
	  • Repeatable structure
	• No tier bypassing
	• Normalized form allows for property design & analysis
	  • Boundary deference
	  • Coordination/constraint fusion
	• Scalable implementations are feasible
	• Connectivity & data flow patterns easier to secure

What might an integrated decentralized electric system with a total DSO look like (model D)?

- DSO aggregates & coordinates all DER & end-use loads within each D area, submits single bid to ISO at P-node
  - ISO/RTO sees a single resource at the P-node
  - DSO coordinates local resources to respond to ISO dispatches
- DSO provides open-access distribution service
  - Balance supply-demand within the D area, using interchange with the ISO/RTO for sales & purchases
  - Coordinate real-time operation of DER within each D area, using services provided by flexible DER to support reliability
  - Facilitate & settle transactions between DER & end-users
  - Plan distribution infrastructure upgrades
  - Perform/administer open-access interconnection procedures
  - Operate independent of providers of customer energy services, DER operators & distribution system owners

Today's municipal utilities provide a limited model for the total DSO

- Municipal utility embedded within ISO system manages all DER & end-use customers within its local system
  - Appears to ISO/RTO as a single resource at the P-node
  - Balances supply-demand within its local area, using interchange with the ISO/RTO for needed sales or purchases
  - But … municipal utility typically owns or contracts with vast majority of supply & serves nearly all internal load
- Total DSO model goes quite a bit further
  - Provides open-access distribution service, including real-time operation, interconnection, infrastructure planning
  - May own or contract with only a fraction of supply & serve small portion of load => far more autonomous actors
  - May operate a local market for customer-DER transactions & reliability services to support DSO operation

Integrated decentralized system may be a layered or nested hierarchy of optimizing sub-systems.

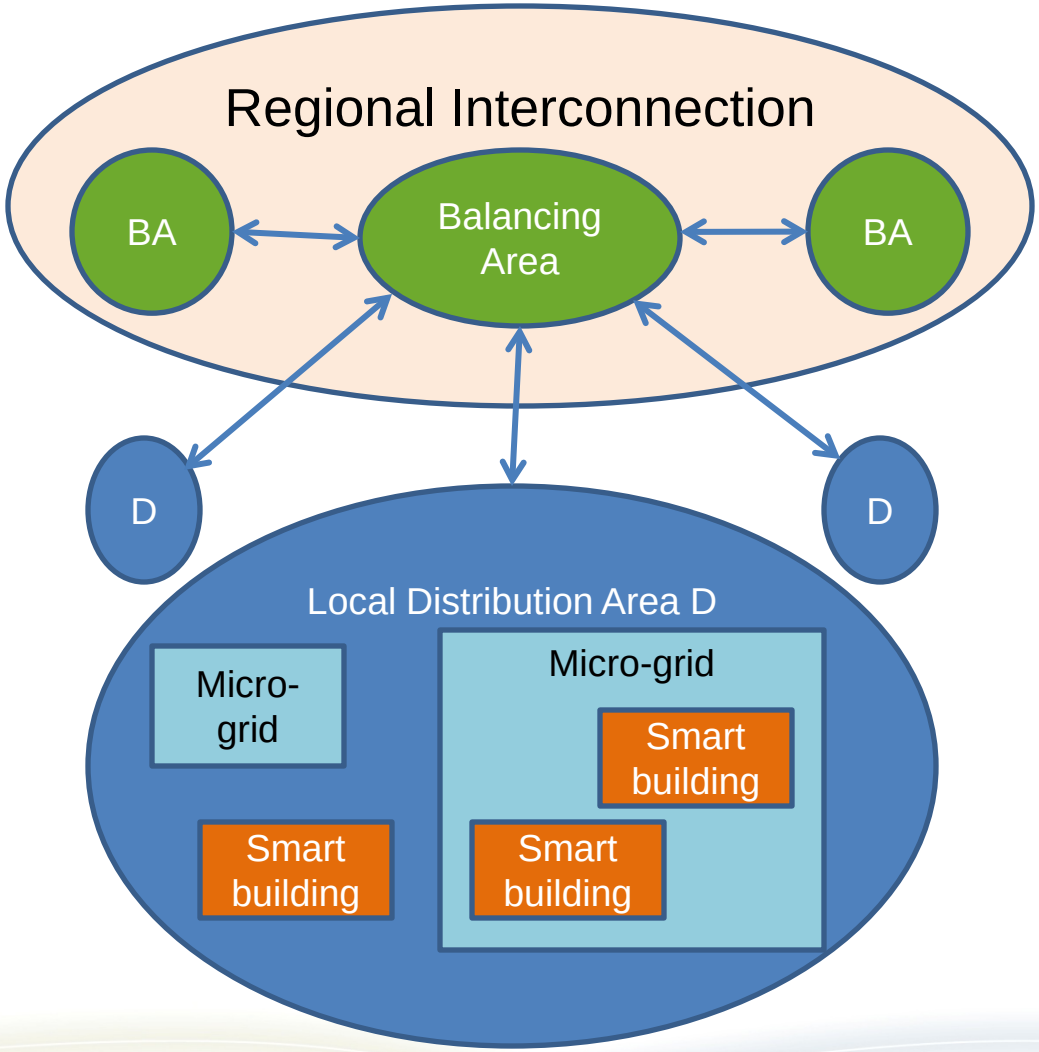

- Design precludes tier bypassing
- Each tier only needs to see interchange with next tier above & below, not the details internal to lower-tier entities
- Allows scalable implementation, mimics natural or biological systems

Other desirable features may emerge in the integrated decentralized energy network with total DSO.

- New business models may emphasize management of volatility, with less exposure to kWh/MWh revenues
  - Settlements between TSO & DSO reflect TSO's cost of managing inter-temporal volatility of T-D interchange
  - Settlements between DSO & DER/customers in each D area reflect DSO's cost of managing volatility of DER/customer's net output or load
    - DER/customers that add variability pay more for DSO services
    - DER/customers that help manage variability can be paid
- Total DSO could operate local markets, eliminate motive for direct DER participation in wholesale market
- TSO can emphasize wide-area coordination, such as:
  - Real-time energy imbalance markets over multiple states
  - Access to renewable-rich areas with minimal new infrastructure

Thank you.